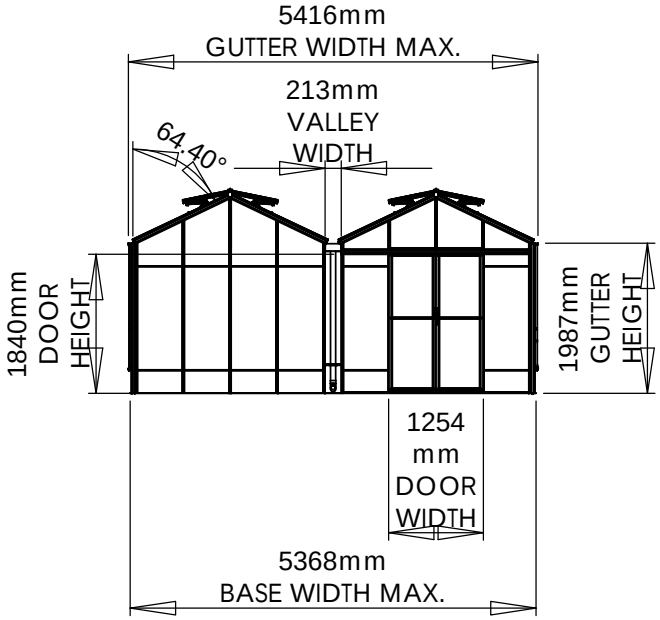

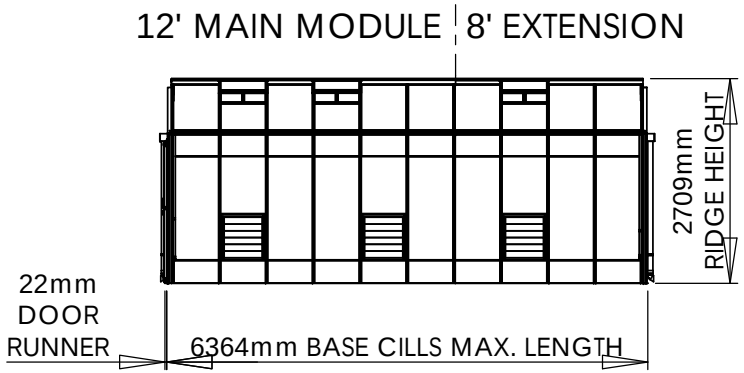

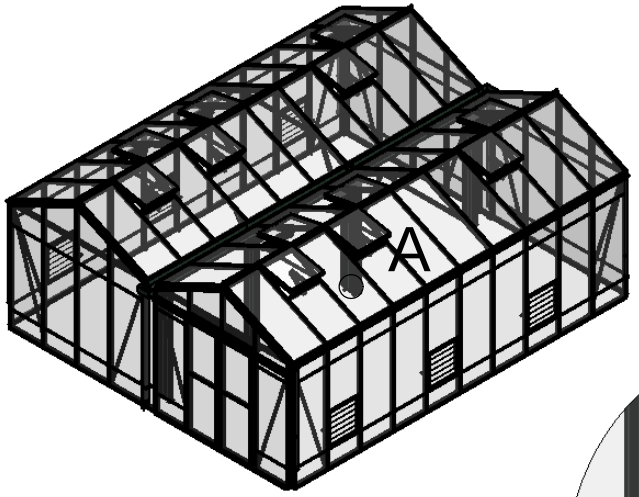

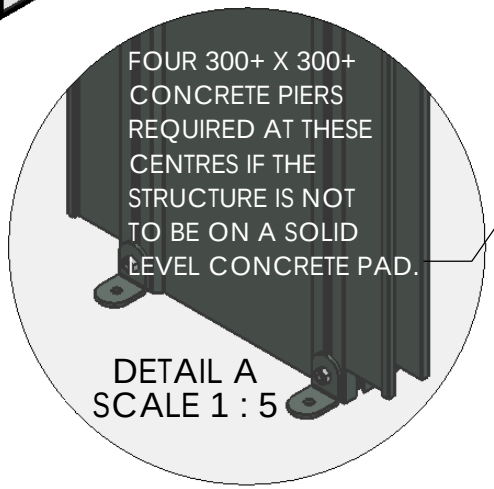

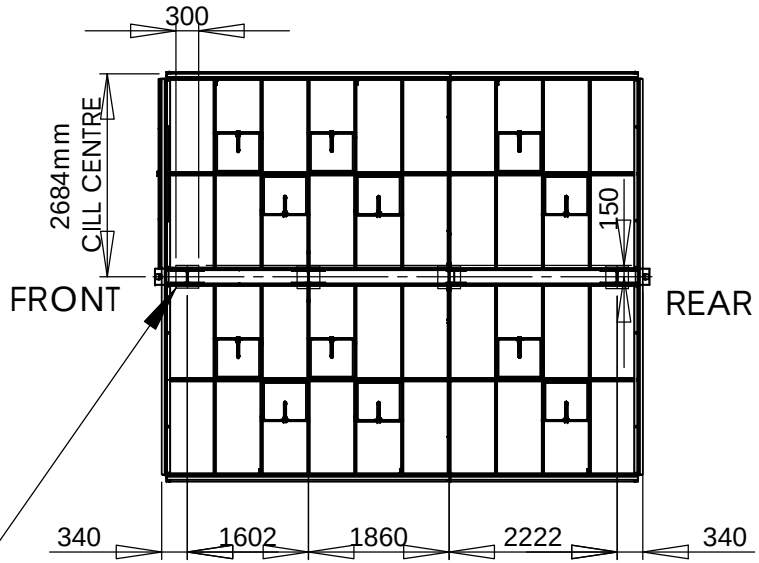

0 1000mm
SCALE 1:100

17 X 20 REACH ROYALE TWINSPAN